Irradiation Testing – Experiment Engineering and Fabrication

Kevin Clayton,
Project Management, Irradiation Testing

June 2012

Idaho National Laboratory

ATR
National Scientific User Facility

Experiment Engineering Process

- **Interface process starts during proposal development**
  - Level of proposal detail influences design activities and timeline
  - For NSUF Projects, INL interface initiates following proposal selection
- **Develop Engineering Inputs – Technical & Functional Requirements**
  - Test Description
  - Material Forms
  - Physical Dimensions
  - Desired Flux (Fast/Thermal)
  - Temperatures
  - Internal Pressures
  - Gas Environment
  - Irradiation Schedule
  - Design Control Requirements
  - Post Irradiation Examination Requirements
  - Quality Assurance Requirements
  - Classification and Security Requirements

Experiment Design

- **Specimen material, size, and geometry**
  - Finite test volume
  - Potential materials interactions
  - Sample preparation for PIE
  - Sample positioning
- **Capsule size and geometry**
  - Independent volumes (for tailored temperatures) require increased volume (plenum, hardware)
  - Gas gap size and gas composition (for tailored temperature)
- **ATR Irradiation Position**
  - Geometry, experiment size, flux

Experiment Design Cont.

- **Data Collection**
  - On-line measurements (thermocouples, gas monitoring)
  - Passive measurements (flux wires, melt wires, temperature monitors)
  - PIE measurements
- **Experiment Type**
  - Static capsule, instrumented lead, loop, shuttle
- **Reactor Operations Interactions**
  - Facility utilization impacts
  - Reactor core configuration impacts
  - Canal storage availability
  - Handling and packaging
  - Operational procedures
  - Experiment support

Experiment Design Cont.

- **Engineering**
  - Facility Authorization Basis
  - Code requirements
  - Material selections
  - Material availability and cost
  - Dimension and tolerance
  - Available fabrication shop capabilities
  - Available assembly shop capabilities
  - Weld and inspection capabilities
  - Quality inspections or verifications
  - Special tooling
  - System operational testing
  - Operating procedures
  - Assembly procedures
  - Handling and packaging
  - Post irradiation examination requirements
  - Waste disposal

Experiment Design Cont.

- **Design Outputs**
  - Drawings
  - Neutronic analysis (neutron and gamma heating)
  - Thermal analysis (materials, thermal gas gap)
  - Structural analysis (flow induced vibration, seismic)
  - Engineering design analysis (over pressure protection, code reconciliation)
  - Experiment safety analysis (determine safety margins)

Design Considerations - Specimens

Mini-tensile

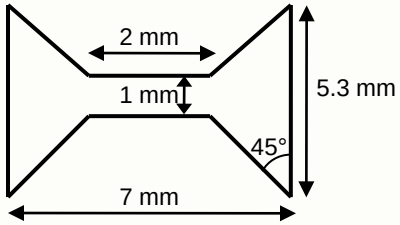

thickness = 0.2-1.0 mm

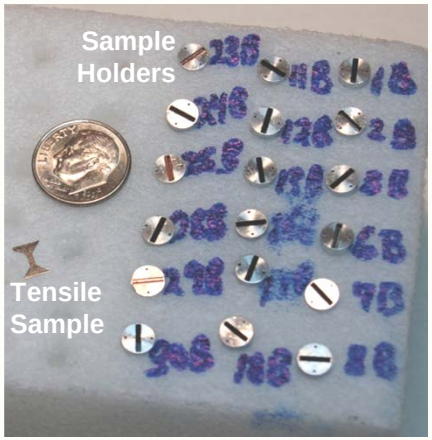

Mini-tensile

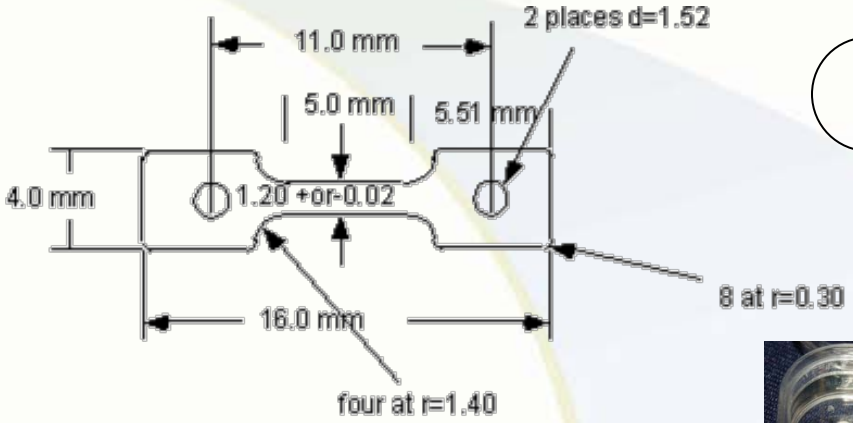

TEM Disk

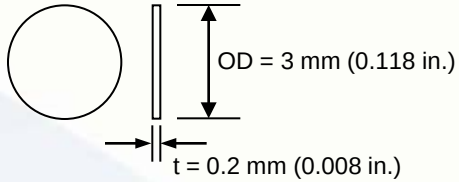

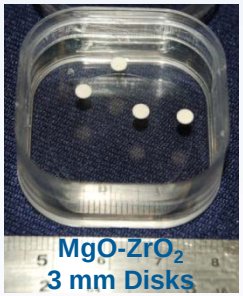

Larger disks (6 mm) used for diffusivity measurements

Thicker disks used for shear punch and hardness testing

Design Considerations - Holders

- **Considerations**
  - Thermal – maximize or minimize heat transfer
  - Positioning / centering
  - Ease of assembly / disassembly
  - Irradiation / thermal effects

U Illinois TEM Holder & Irradiation Capsule

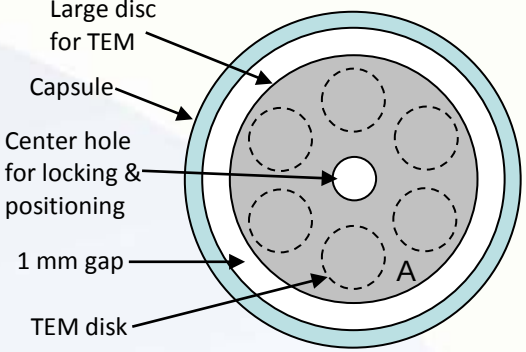

U Illinois Tensile Holder & Irradiation Capsule

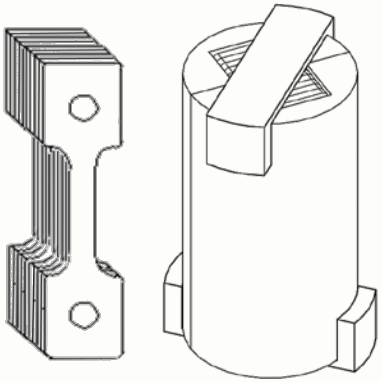

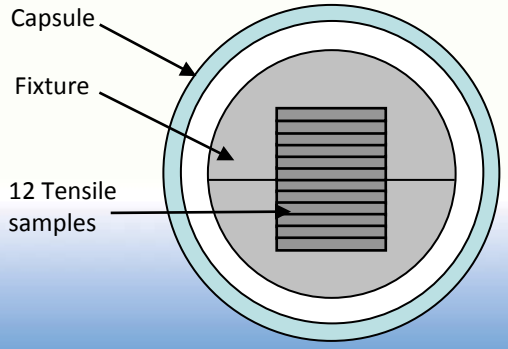

U Illinois Sample Holder & Irradiation Capsule

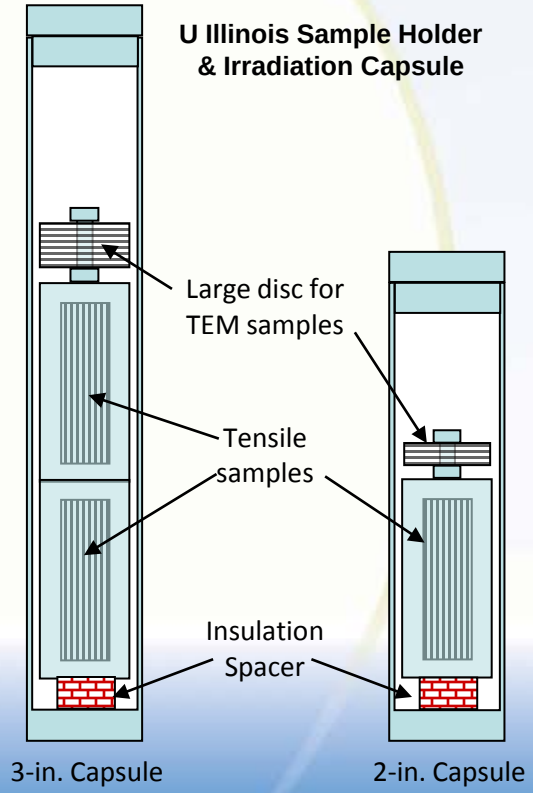

UW TEM Disk Fixtures

Design Considerations- Capsules

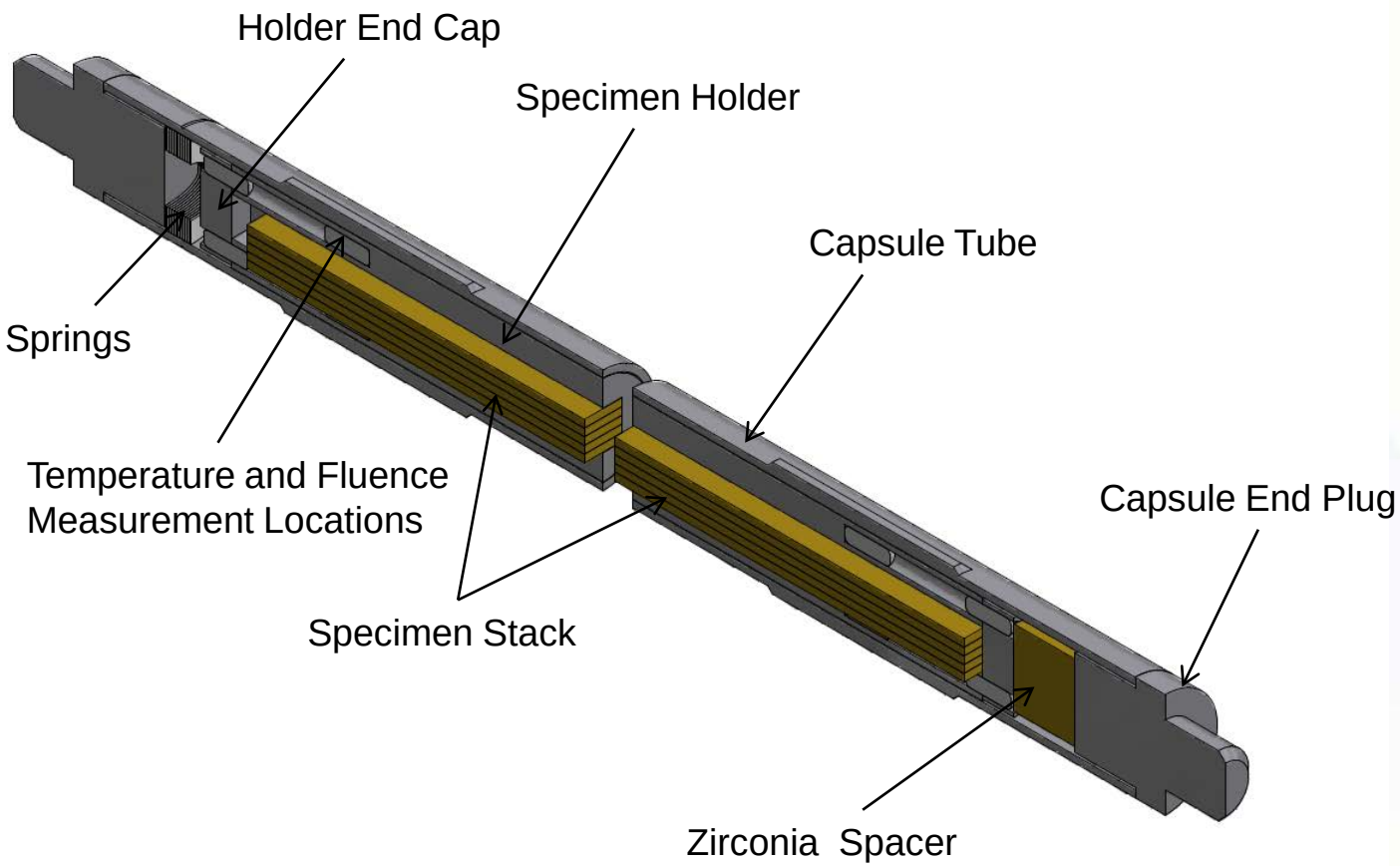

Design Considerations – Instrumentation

- **Limited to passive measurements in static capsule**
  - Flux wires
  - Melt wires
  - Temperature monitors
- **Instrumented Lead**
  - Thermocouples are most common
  - Consider temperature and irradiation effects
- **Effluent Monitors**

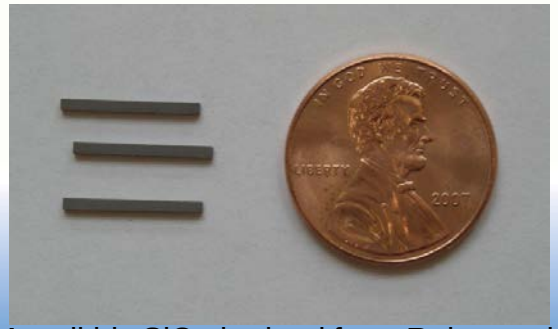

Monolithic SiC obtained from Rohm and Haas, Philadelphia, PA ($130/each)

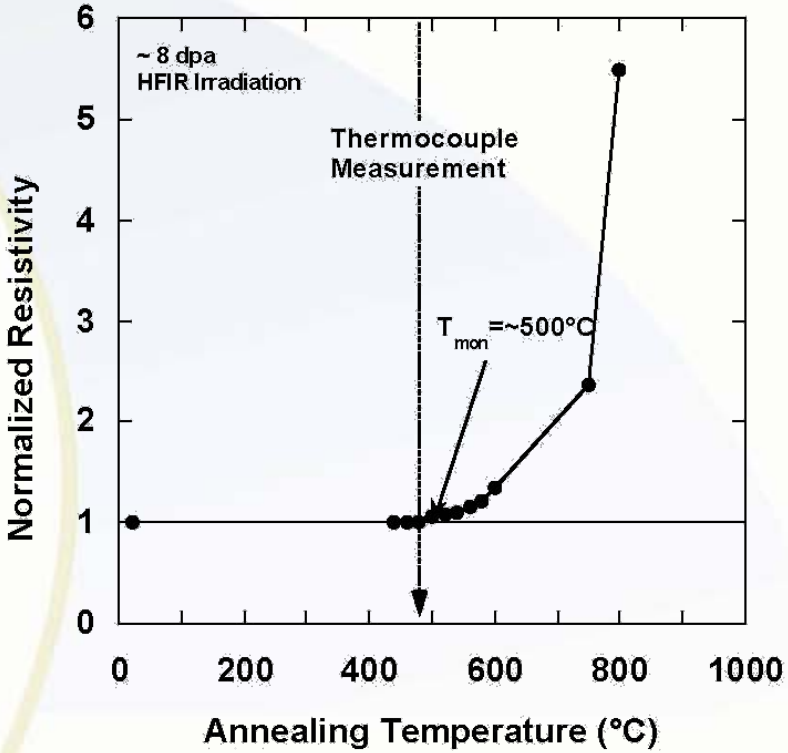

Design Considerations – Sensors

Parameter	Parameter			ATR Technology	Proposed Advanced Technology	
	Static Capsule /HSIS	Instr. Lead	PWR Loop		Available at Other Reactors	Developmental
Temperature	√	√	√	• Melt Wires (single) • SiC Temperature Monitors (range)	• Paint Spots	
		√	√	• Thermocouples (Type N, K, C, and HTIR-TCs)[a]	• Expansion Thermometers	• Fiber Optics • Noise Thermometry • Ultrasonic Thermometers
Thermal Conductivity		√	√		• Degradation using Signal Changes in Thermocouples	• Hot Wire Techniques
Fluence (neutron)	√	√	√	• Flux wires (Fe, Ni, Nb)	• Activating Foil Dosimeter and Flux Wires	
		√	√		• Self-Powered Neutron Detectors (SPNDs) • Miniature Fission Chambers	• Moveable SPNDs • Micro-Pocket Fission Detectors
Localized Heating		√	√		• Gamma Thermometers • Calorimeters	
Dimensional		√	√		• LVDTs • Diameter Gauge	• Ultrasonic Transducers • Fiber Optics
Fission Gas (Amount, Composition)		√	√	• Gas Chromatography • Pressure Sensors • On-line Fission Product Monitoring • Sampling	• LVDT-based Pressure Gauge	• Acoustic Measurements with High-frequency Echography
Loop Pressure			√	• Differential Pressure Transmitters • Pressure Gauges with Impulse Lines		
Loop Flowrate			√	• Flow Venturis • Orifice plates	• Turbine Flow meters (for individual fuel assemblies)	
Loop Water Chemistry			√	• Off-line Sampling /Analysis	• Electrical Chemical Potential Probes	
Crud Deposition			√		• Diameter Gauge with Neutron Detectors and Thermocouples	
Crack Growth Rate			√		• Direct Current Potential Drop Technique	

[a]Type C thermocouple use requires a "correction factor " to correct for decalibration during irradiation.

Design Considerations – Flux Tailoring

- **Irradiation position**
  - Close to fuel to increase fast fluence
  - Flux trap or reflector to increase thermal
- **Fixed neutron absorption shroud**
  - Integral with encapsulation design
  - More choices of absorption material if isolated from coolant
  - Consumable (e.g. Boron)
- **Removable/replaceable neutron absorption shroud**
  - Solid – chemistry compatibility with reactor coolant
  - Gas shroud – He3

Design Considerations – Temperature Distribution

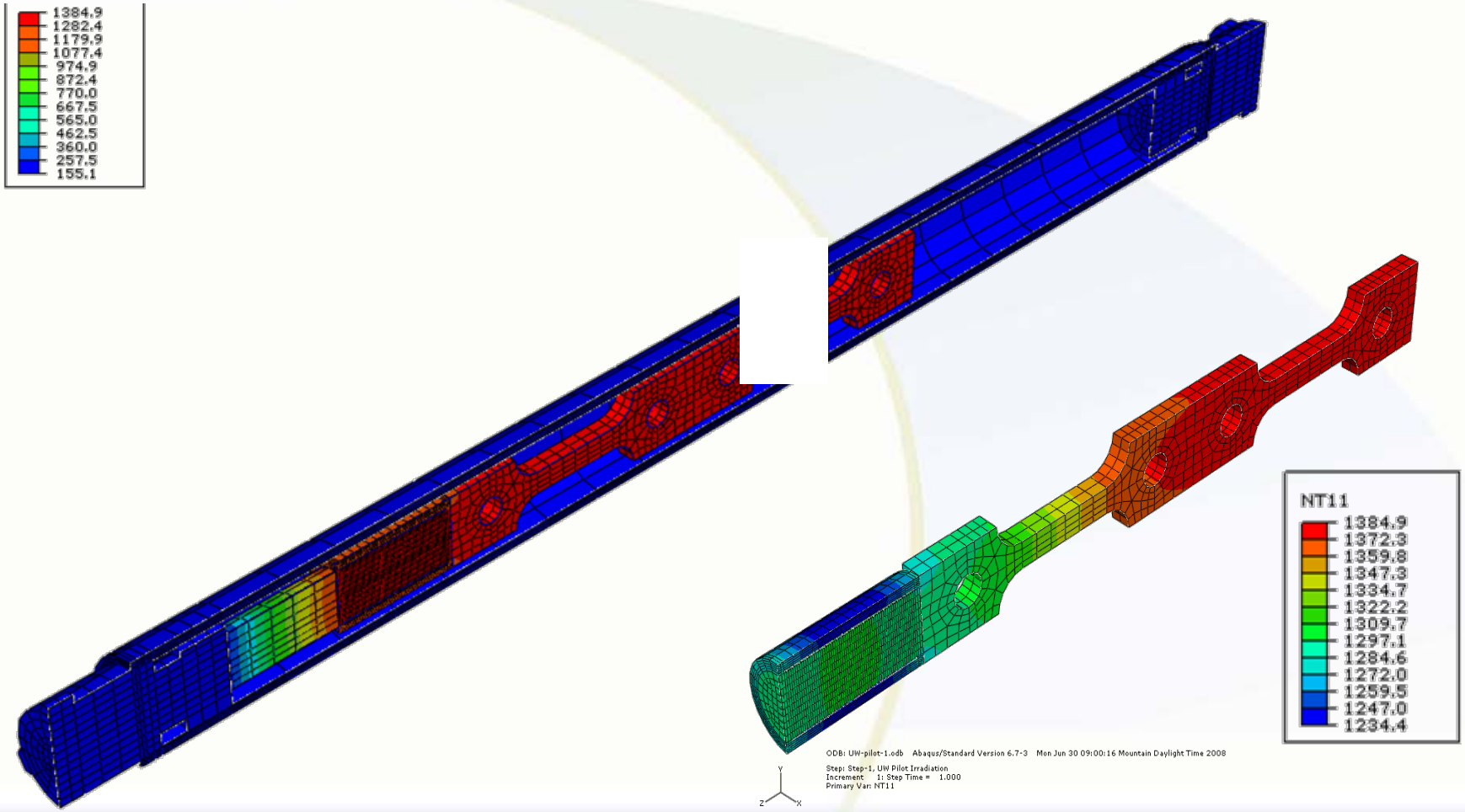

ODB: UW-pilot-1.odb Abaqus/Standard Version 6.7-3 Mon Jun 30 09:00:16 Mountain Daylight Time 2008
Step: Step-1, UW Pilot Irradiation
Increment 1: Step Time = 1.000
Primary Var: NT11
Y
Z
X

Fabrication and Assembly

- Material selections
- Material availability and cost
- Dimension and tolerance
- Available fabrication shop capabilities
- Available assembly shop capabilities
- Weld and inspection capabilities

Fabrication and Assembly Cont.

- **Full Machine Shop Capabilities**
- **Weld Engineers with Experience in Alloy Steels**
- **New, Fully Equipped Test Train Assembly Facility (TTAF)**
  - Test Train Assembly Tables and Fixturing
  - Induction Braze Hardware
  - Automated Welding Equipment
  - Pressure/ Leak Testing Equipment TC Testing Equipment

Fabrication and Assembly Cont.

TTAF Assembly Floor

Fabrication and Assembly Cont.

TTAF Welding Fixture

Fabrication and Assembly Cont.

Induction brazing being performed in the RTC Test Train Assembly Facility (TTAF)

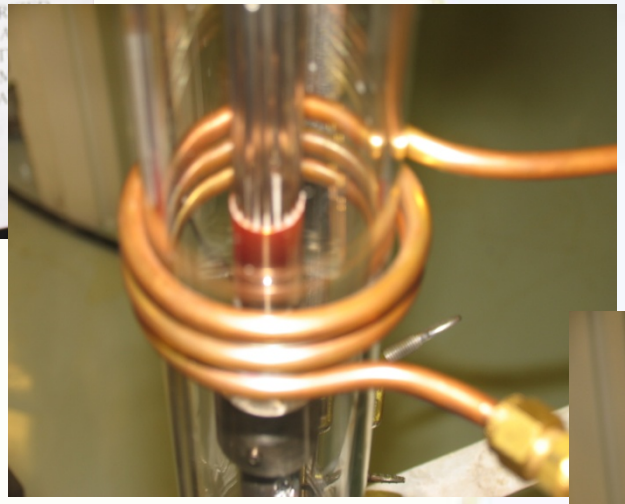

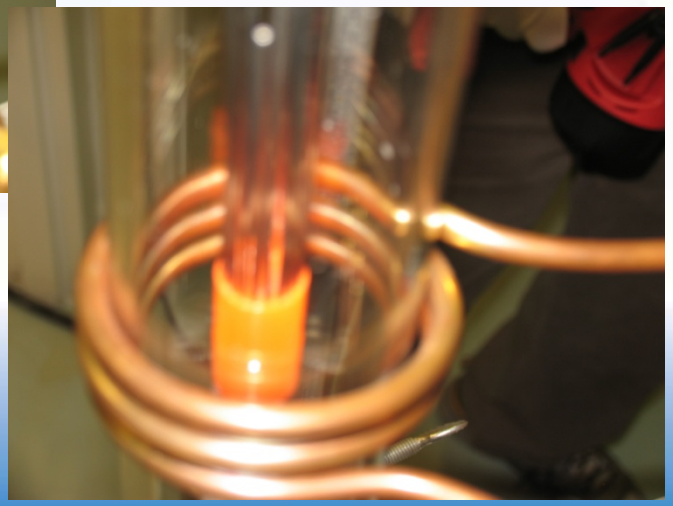

Fabrication and Assembly Cont.

Loading Samples

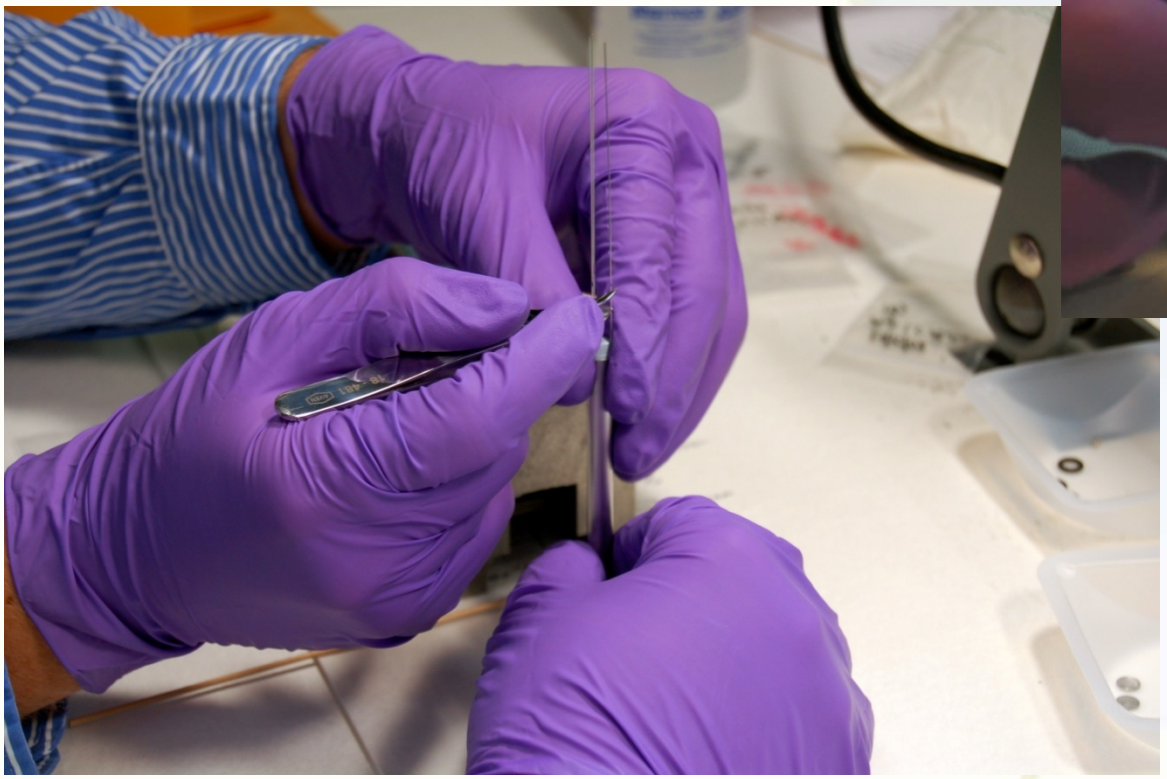

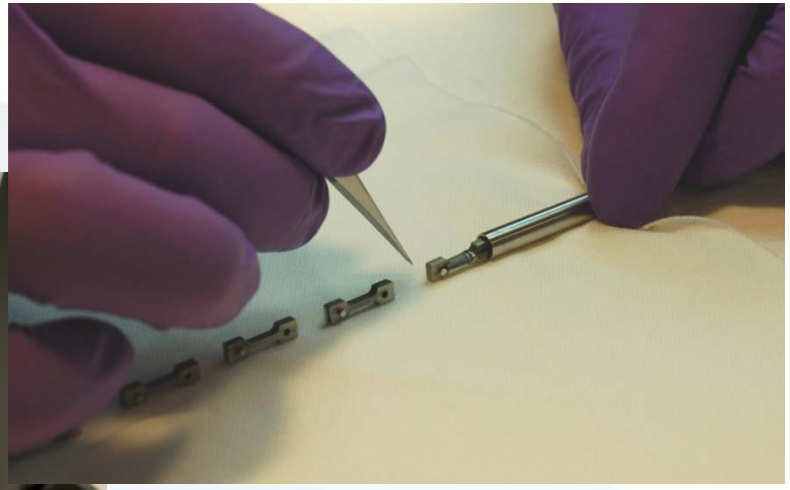

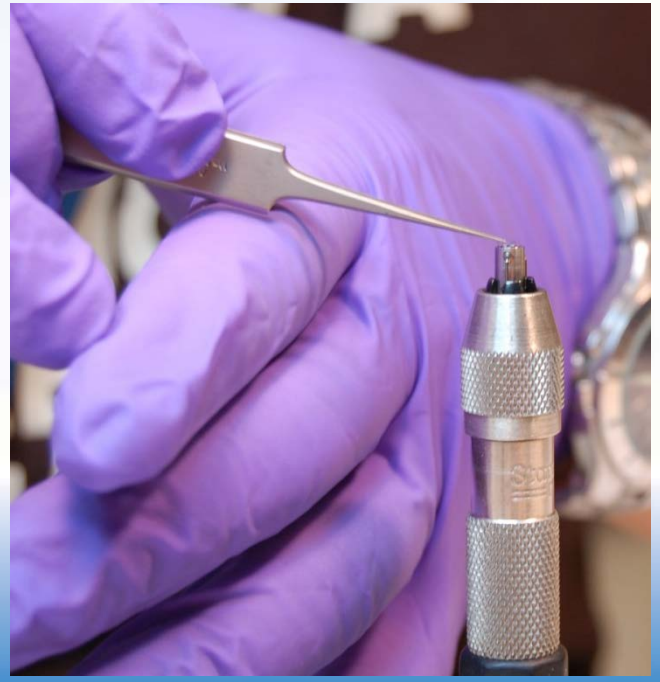

Fabrication and Assembly Cont.

- **Rodlet and capsule closure welds performed in glovebox for controlled atmosphere**

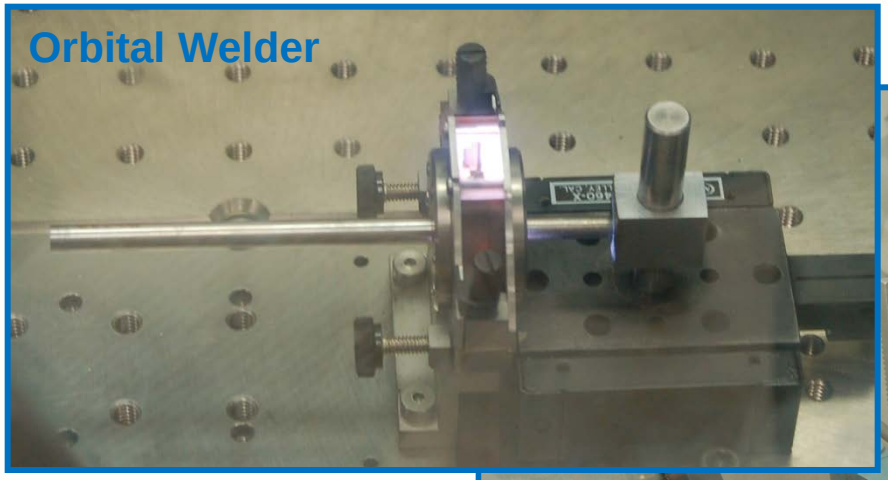

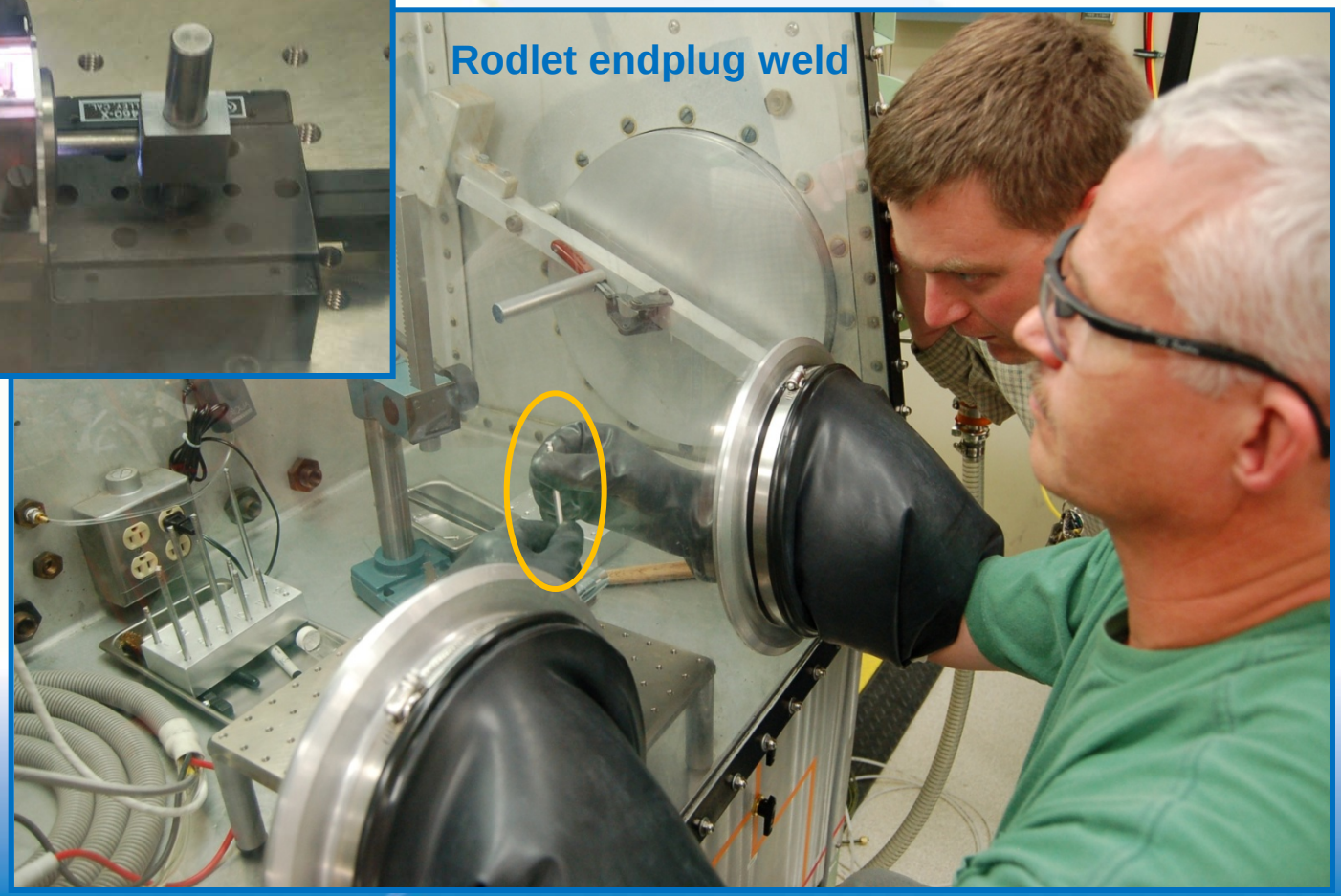

Fabrication and Assembly Cont.

- Induction brazing of instrument leads (e.g. thermocouples) to penetrate capsule boundaries
- Electro-plating, typically in support of induction brazes
- Thermocouple potting and splicing
- Heat treatment and (specimen) vacuum drying ovens
- Welding - Standard GTAW and MIG, tube welder
- Pressure and helium leak testing

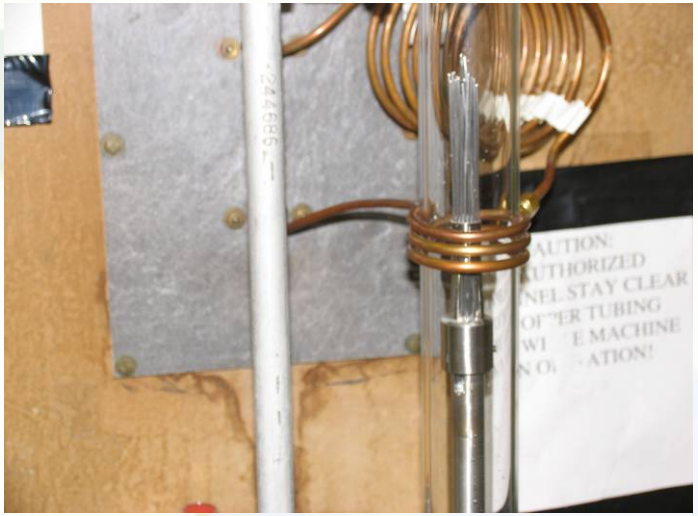

Fabrication and Assembly Cont.

- Weld Inspection
  - Visual
  - Radiography
  - Liquid penetrant
  - Helium leak test
- Loading Verification
- Dimensional Inspection
- Material / sample Chemistry Verification or Analysis

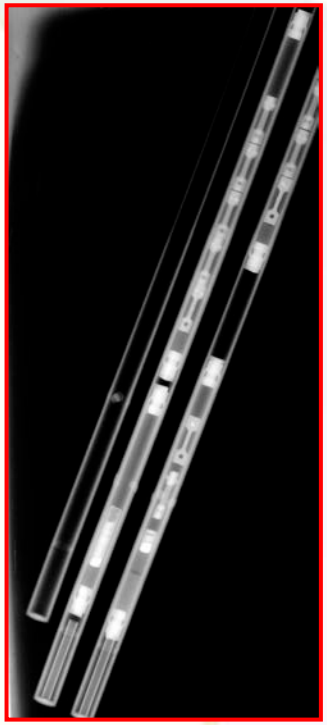

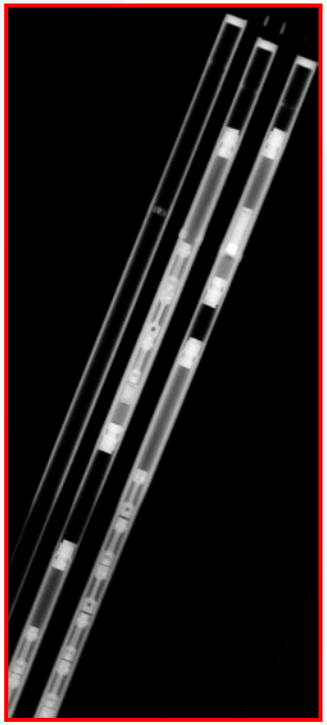

UW Capsule Radiography

U Florida Capsule Radiography

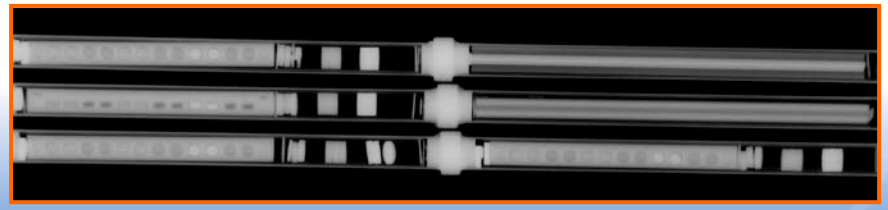

Fabrication and Assembly Cont.

ATR National Scientific User Facility

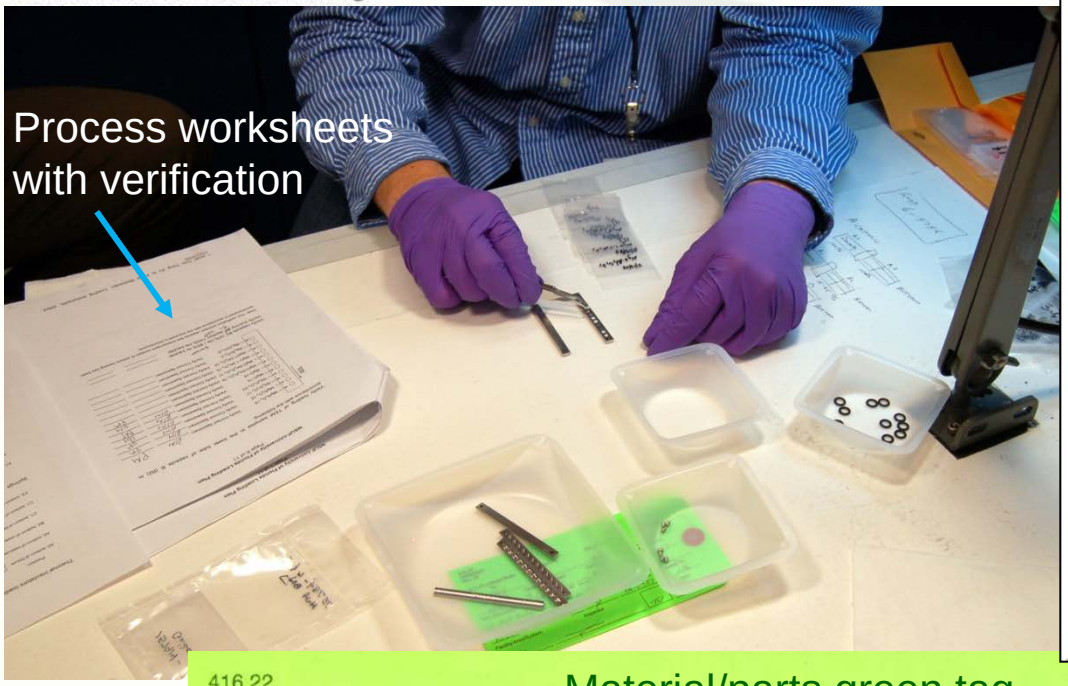

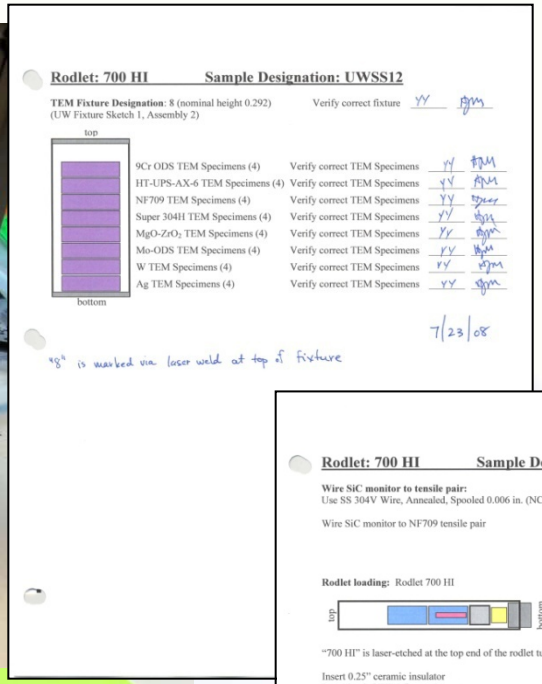

Rodlet: 700 HI **Sample Designation: UWSS12**

TEM Fixture Designation: 8 (nominal height 0.292) (UW Fixture Sketch 1, Assembly 2) — Verify correct fixture YY

top

9Cr ODS TEM Specimens (4)	Verify correct TEM Specimens	YY
HT-UPS-AX-6 TEM Specimens (4)	Verify correct TEM Specimens	YY
NF709 TEM Specimens (4)	Verify correct TEM Specimens	YY
Super 304H TEM Specimens (4)	Verify correct TEM Specimens	YY
MgO-ZrO_2 TEM Specimens (4)	Verify correct TEM Specimens	YY
Mo-ODS TEM Specimens (4)	Verify correct TEM Specimens	YY
W TEM Specimens (4)	Verify correct TEM Specimens	YY
Ag TEM Specimens (4)	Verify correct TEM Specimens	YY

bottom

7/23/08

"8" is marked via laser weld at top of fixture

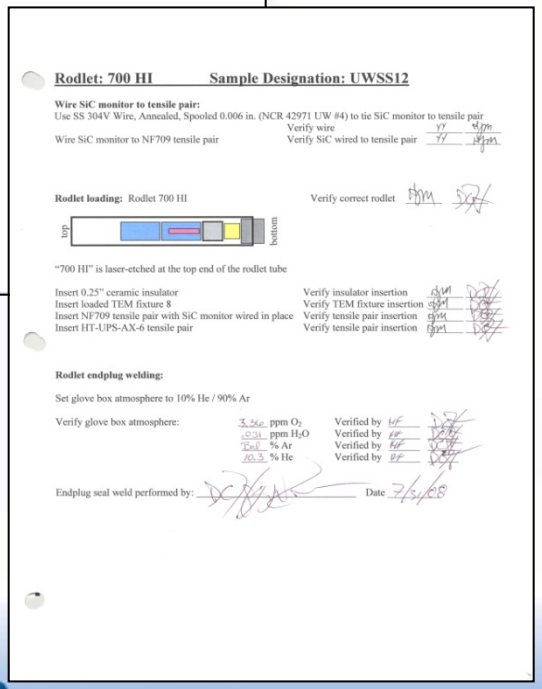

Rodlet: 700 HI **Sample Designation: UWSS12**

Wire SiC monitor to tensile pair:
Use SS 304V Wire, Annealed, Spooled 0.006 in. (NCR 42971 UW #4) to tie SiC monitor to tensile pair
Verify wire YY
Wire SiC monitor to NF709 tensile pair — Verify SiC wired to tensile pair YY

Rodlet loading: Rodlet 700 HI — Verify correct rodlet

top — bottom

"700 HI" is laser-etched at the top end of the rodlet tube

Insert 0.25" ceramic insulator	Verify insulator insertion
Insert loaded TEM fixture 8	Verify TEM fixture insertion
Insert NF709 tensile pair with SiC monitor wired in place	Verify tensile pair insertion
Insert HT-UPS-AX-6 tensile pair	Verify tensile pair insertion

Rodlet endplug welding:

Set glove box atmosphere to 10% He / 90% Ar

Verify glove box atmosphere:

3.360	ppm O_2	Verified by
.031	ppm H_2O	Verified by
90.0	% Ar	Verified by
10.3	% He	Verified by

Endplug seal weld performed by: — Date 7/5/08

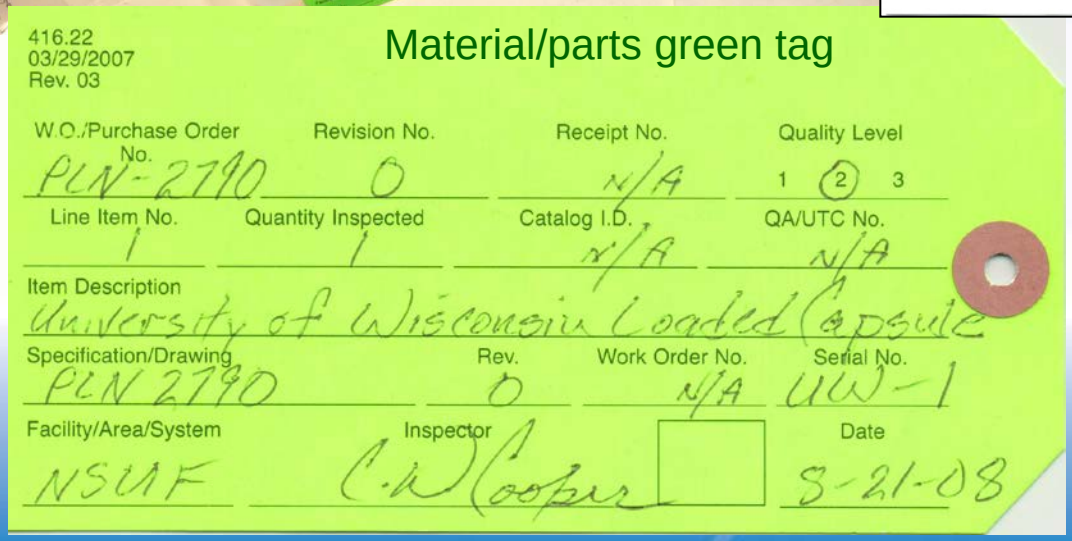

Material/parts green tag

416.22
03/29/2007
Rev. 03

W.O./Purchase Order No.	Revision No.	Receipt No.	Quality Level
PLN-2790	0	N/A	1 (2) 3
Line Item No.	**Quantity Inspected**	**Catalog I.D.**	**QA/UTC No.**
1	1	N/A	N/A

Item Description: University of Wisconsin Loaded Capsule

Specification/Drawing	Rev.	Work Order No.	Serial No.
PLN 2790	0	N/A	UW-1
Facility/Area/System	**Inspector**		**Date**
NSUF	C.W. Cooper		8-21-08

Idaho National Laboratory